455W POS Terminal
User Manual

Copyright 2021
All Rights Reserved Manual
Version 1.0

The information contained in this document is subject to change without notice.
We make no warranty of any kind with regard to this material, including, but not limited to, the implied warranties of merchantability and fitness for a particular purpose. We shall not be liable for errors contained herein or for incidental or consequential damages in connection with the furnishing, performance, or use of this material.

This document contains proprietary information that is protected by copyright. All rights are reserved. No part of this document may be photocopied, reproduced or translated to another language without the prior written consent of the manufacturer.

TRADEMARK

Intel®, Pentium® and MMX are registered trademarks of Intel® Corporation. Microsoft® and Windows® are registered trademarks of Microsoft Corporation.
Other trademarks mentioned herein are the property of their respective owners.

Safety

IMPORTANT SAFETY INSTRUCTIONS

1. To disconnect the machine from the electrical power supply, turn off the power switch and remove the power cord plug from the wall socket. The wall socket must be easily accessible and in close proximity to the machine.
2. Read these instructions carefully. Save these instructions for future reference.
3. Follow all warnings and instructions marked on the product.
4. Do not use this product near water.
5. Do not place this product on an unstable cart, stand, or table. The product may fall, causing serious damage to the product.
6. Slots and openings in the cabinet and the back or bottom are provided for ventilation to ensure reliable operation of the product and to protect it from overheating. These openings must not be blocked or covered. The openings should never be blocked by placing the product on a bed, sofa, rug, or other similar surface. This product should never be placed near or over a radiator or heat register or in a built-in installation unless proper ventilation is provided.
7. This product should be operated from the type of power indicated on the marking label. If you are not sure of the type of power available, consult your dealer or local power company.
8. Do not allow anything to rest on the power cord. Do not locate this product where persons will walk on the cord.
9. Never push objects of any kind into this product through cabinet slots as they may touch dangerous voltage points or short out parts that could result in a fire or electric shock. Never spill liquid of any kind on the product.

CE MARK

This device complies with the requirements of the EEC directive 2014/30/EU with regard to "Electromagnetic compatibility" and 2014/35/EU "Low Voltage Directive".

FCC

This device complies with part 15 of the FCC rules. Operation is subject to the following two conditions:

(1) This device may not cause harmful interference.

(2) This device must accept any interference received, including interference that may cause undesired operation.

CAUTION ON LITHIUM BATTERIES

There is a danger of explosion if the battery is replaced incorrectly. Replace only with the same or equivalent type recommended by the manufacturer. Discard used batteries according to the manufacturer's instructions.

Battery Caution

Risk of explosion if battery is replaced by an incorrectly type. Dispose of used battery according to the local disposal instructions.

Safety Caution

Note: To comply with IEC60950-1 Clause 2.5 (limited power sources, L.P.S) related legislation, peripherals shall be 4.7.3.2 "Materials for fire enclosure" compliant.

4.7.3.2 Materials for fire enclosures

For MOVABLE EQUIPMENT having a total mass not exceeding 18kg.the material of a FIRE ENCLOSURE, in the thinnest significant wall thickness used, shall be of V-1 CLASS MATERIAL or shall pass the test of Clause A.2.

For MOVABLE EQUIPMENT having a total mass exceeding 18kg and for all STATIONARY EQUIPMENT, the material of a FIRE ENCLOSURE, in the thinnest significant wall thickness used, shall be of 5VB CLASS MATERIAL or shall pass the test of Clause A.1

LEGISLATION AND WEEE SYMBOL

2012/19/EU Waste Electrical and Electronic Equipment Directive on the treatment, collection, recycling and disposal of electric and electronic devices and their components.

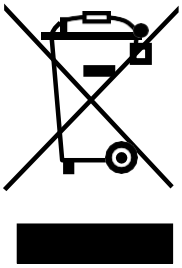

The crossed dust bin symbol on the device means that it should not be disposed of with other household wastes at the end of its working life. Instead, the device should be taken to the waste collection centers for activation of the treatment, collection, recycling and disposal procedure.
To prevent possible harm to the environment or human health from uncontrolled waste disposal, please separate this from other types of wastes and recycle it responsibly to promote the sustainable reuse of material resources.

Household users should contact either the retailer where they purchased this product, or their local government office, for details of where and how they can take this item for environmentally safe recycling.

Business users should contact their supplier and check the terms and conditions of the purchase contract.

This product should not be mixed with other commercial wastes for disposal.

Revision History

Changes to the original user manual are listed below:

TABLE OF CONTENTS

1. Packing List 7
    - 1-1. Standard Accessories 7
    - 1-2. Optional Accessories 8

2. System View 9
    - 2-1. Front & Side View 9
    - 2-2. Rear View 9
    - 2-3. IO Ports View 10
    - 2-4. System Dimensions 11

3. System Assembly & Disassembly 12
    - 3-1. Disassemble the Stand 12
    - 3-2. Remove the Cable Cover 12
    - 3-3. Install the Power Adapter 13
    - 3-4. Replace the M.2 SSD Card 13

4. Peripheral Installation 14
    - 4-1. Install the MSR / Fingerprint / iButton Module 14
    - 4-2. Install the Customer Display 15
    - 4-3. Install the Second Display 16
    - 4-4. Cash Drawer Installation 17

5. Specification 19

6. Configuration 21
    - 6.1 F34 Motherboard 21
    - 6.2 F64U Motherboard 27

1. Packing List

1-1. Standard Accessories

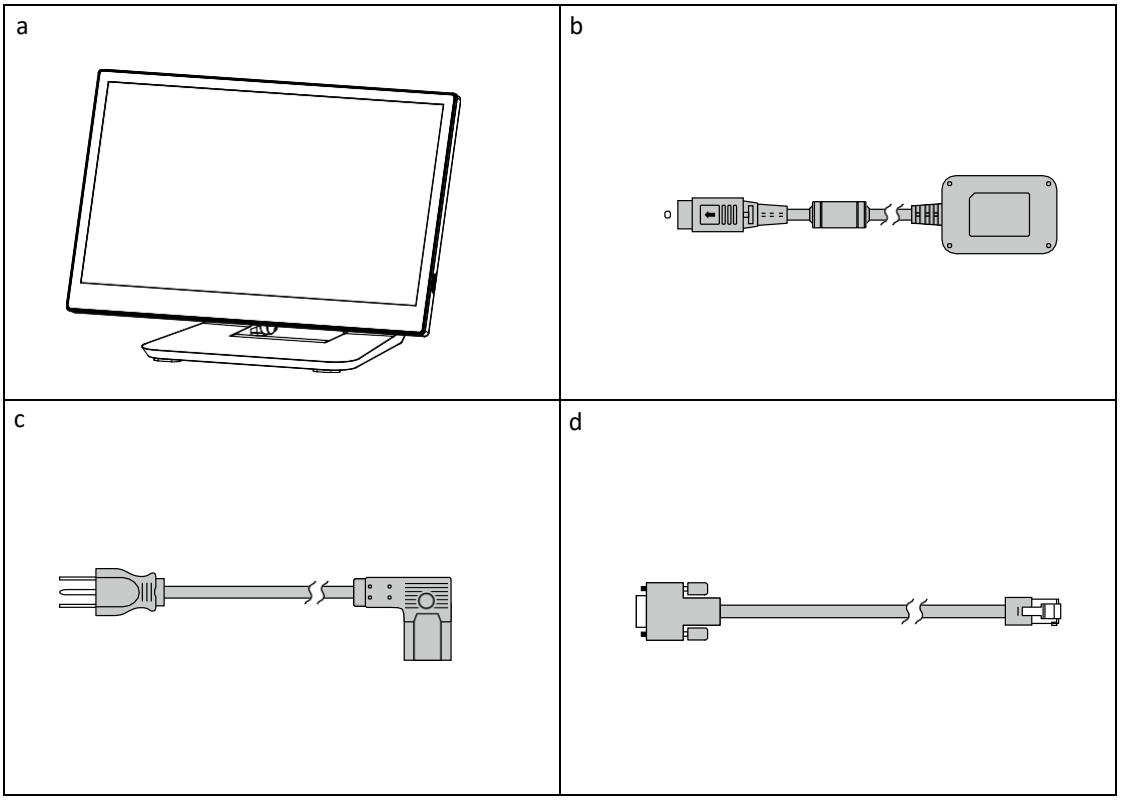

a. System
b. Power adapter
c. Power cord
d. RJ45-DB9 cable (x2)

Note: Power cord will be supplied differently according to various region or country.

1-2. Optional Accessories

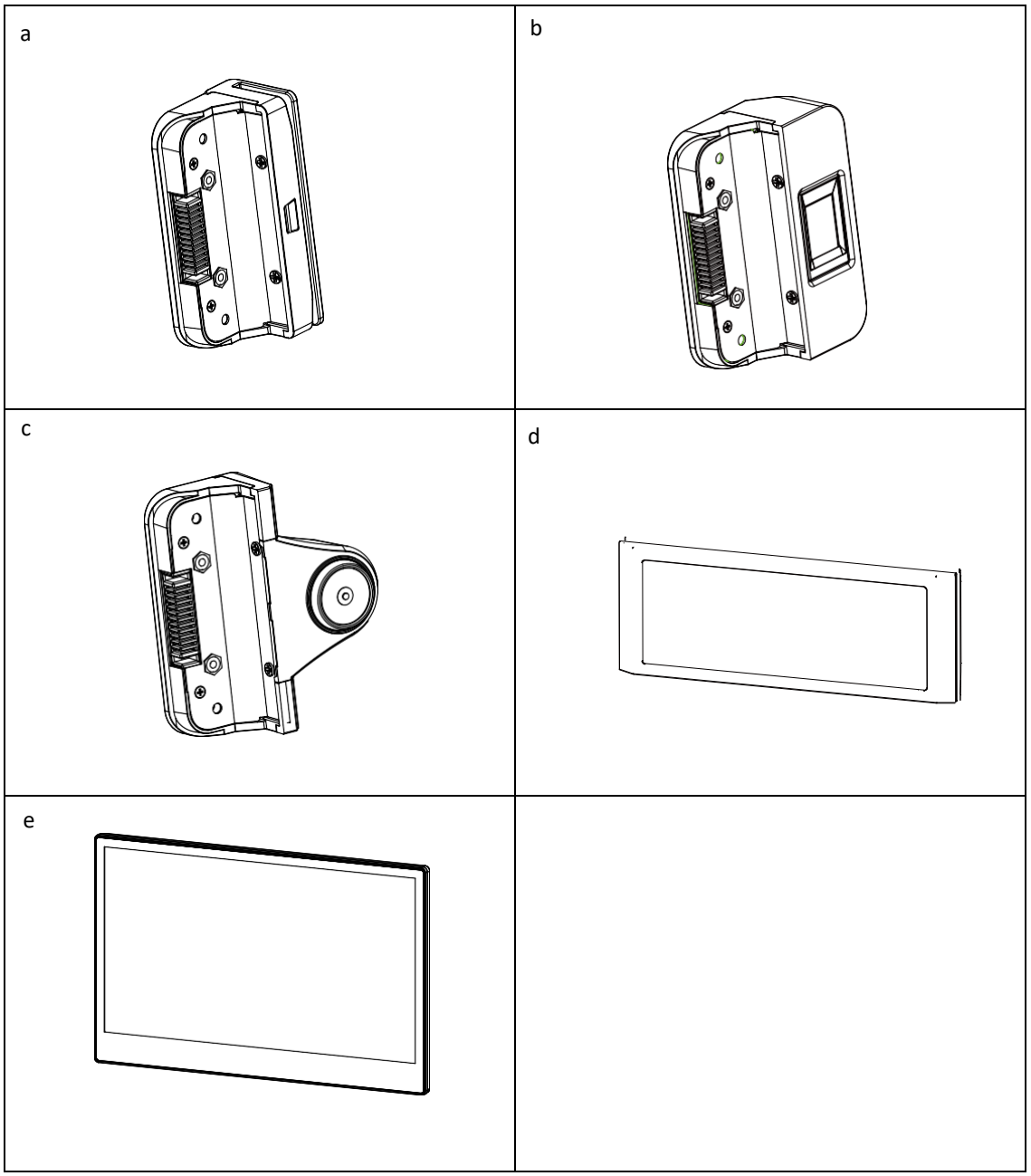

a. MSR module
b. Fingerprint module
c. iButton module
d. Customer display
e. 11.6" 2nd display

2. System View

2-1. Front & Side View

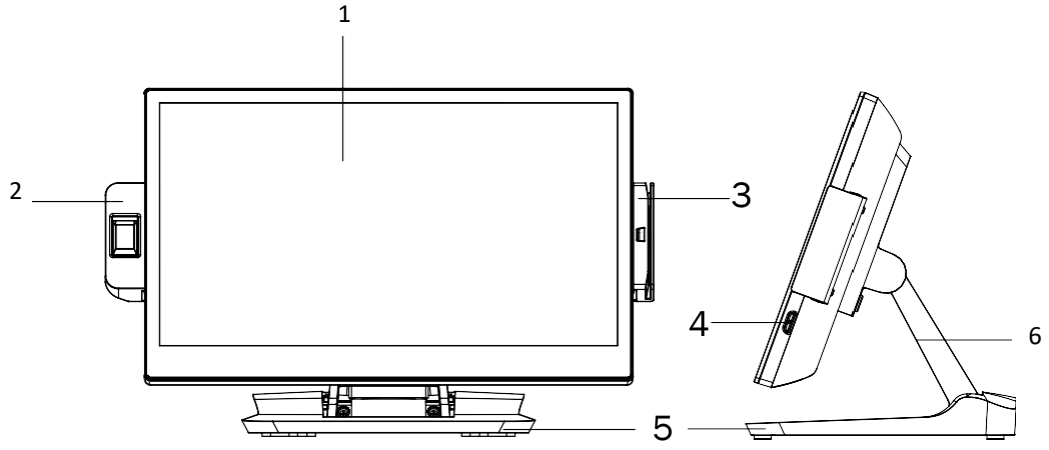

No.	Description
1	Touch screen
2	Fingerprint (option)
3	MSR (option)
4	Power button
5	Stand
6	Stand front cover

2-2. Rear View

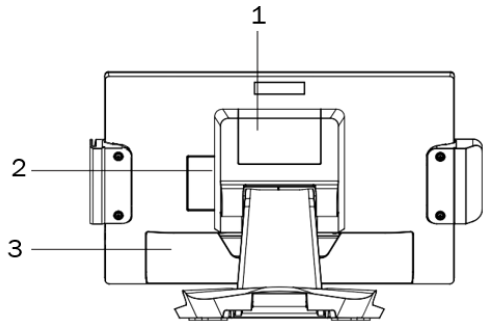

No.	Description
1	VESA top cover
2	SSD door
3	Cable cover

2-3. IO Ports View

F34 Motherboard

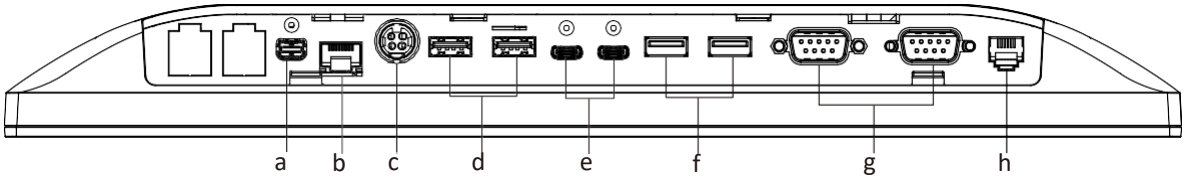

No.	Description
a	FeDP (2nd display)
b	LAN
c	DC 19V in
d	USB 2.0 x 2
e	USB Type C x 2 (USB2.0)
f	USB 3.0 x 2
g	COM x 2
h	Cash drawer

F64U Motherboard

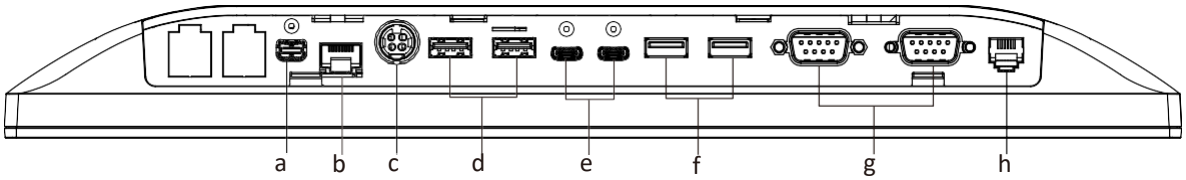

No.	Description
a	FeDP (2nd display)
b	LAN
c	DC 19V in
d	USB 2.0 x 2
e	USB Type C x 2 (USB3.0)
f	USB 3.0 x 2
g	COM x 2
h	Cash drawer

2-4. System Dimensions

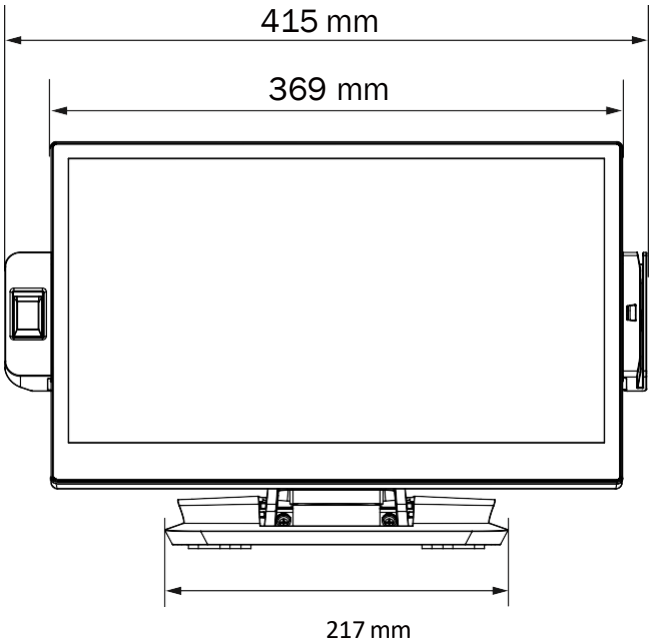

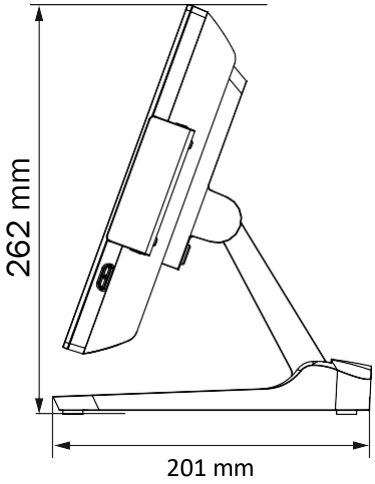

3. System Assembly & Disassembly

3-1. Disassemble the Stand

1. Loosen the thumb screw (x1) and slide the stand towards the IO panel to release it from the system.
2. Reverse the steps above to attach stand to the system.

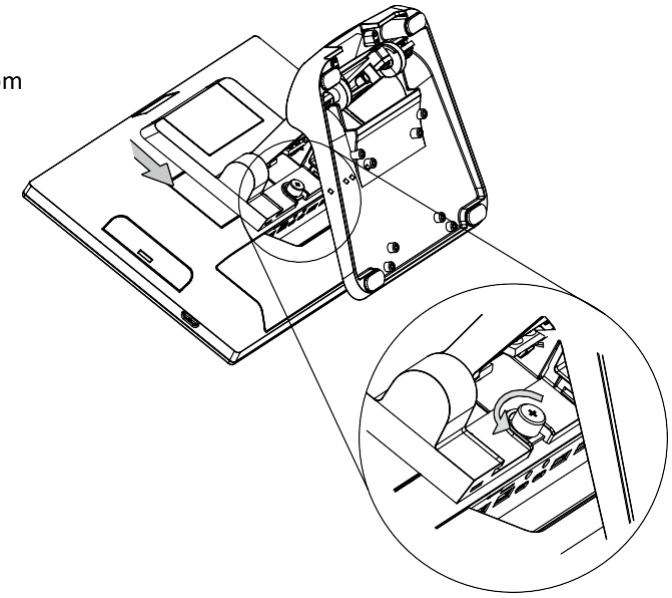

3-2. Remove the Cable Cover

1. Pull the cable cover upwards to release it from the system.

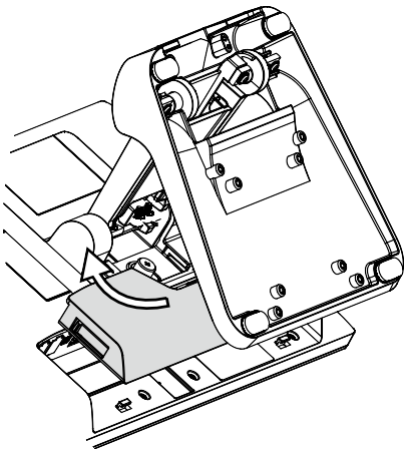

3-3. Install the Power Adapter

The system is equipped with a 65W or 120W power adapter. Please follow the steps to install the power adapter.

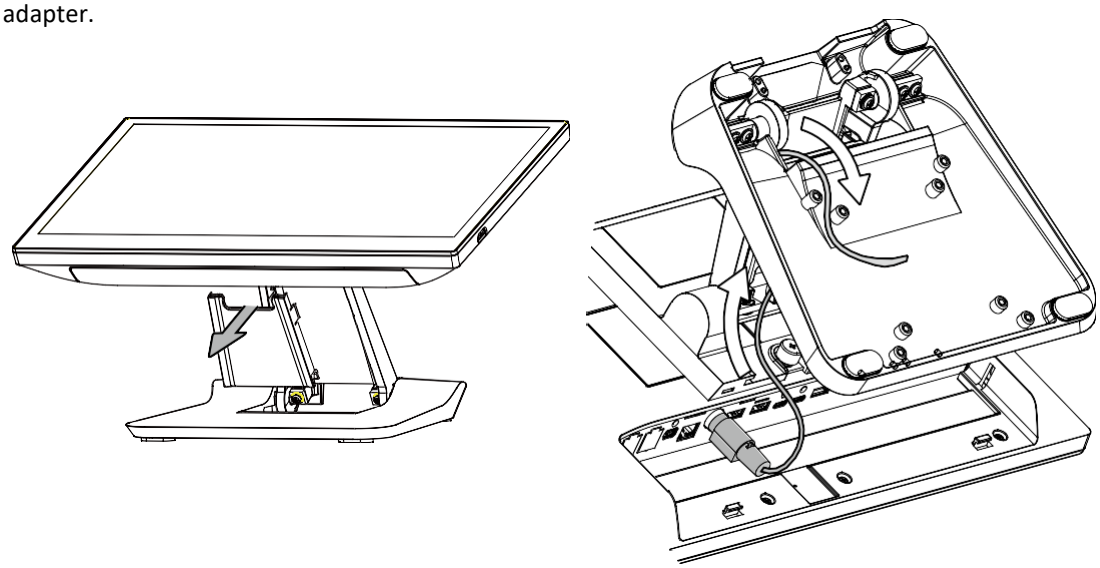

1. The stand is designed to allow for clean cable management. There is a cable channel through the stand, which has a quick access cover. Please pull the front cover of the stand outwards.
2. Place the system face down. Making sure not to scrath the touchscreen.
3. Connect the power adapter to the 19V DC IN port and then route the cable as shown in the picture.
4. Replace the front cover.

3-4. Replace the M.2 SSD Card

1. To replace the M.2 SSD card, please disassemble the stand firstly as steps dscribed in chapter 3-1.
2. Remove the screw (x1) to release the SSD dummy cover.
3. Remove the screws (x2) and pull the M.2 SSD cards outwards as shown in the picture.

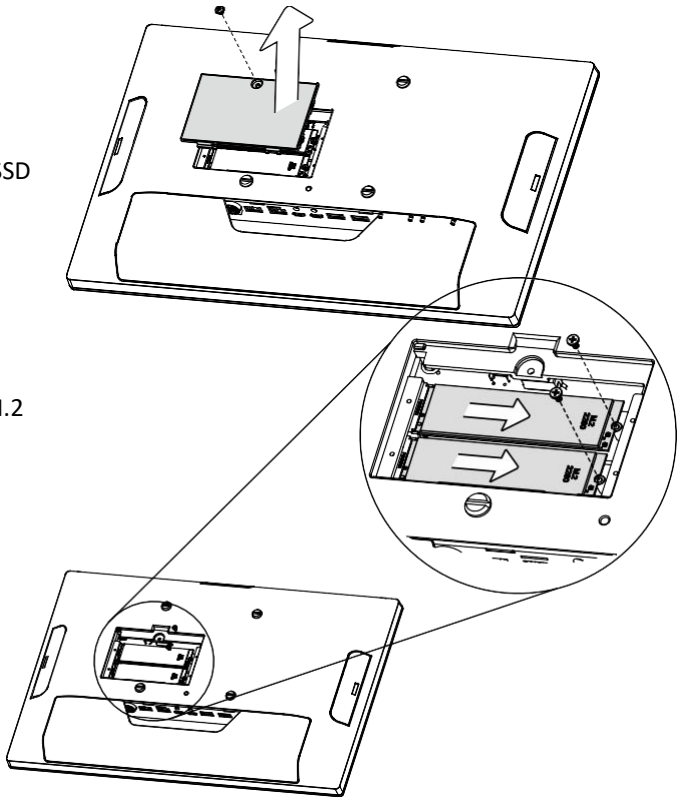

4. Peripheral Installation

4-1. Install the MSR / Fingerprint / iButton Module

1. The variety of peripherals MSR, Fingerprint, and iButton modules can be installed to each side of the system depends on your preference.
2. Remove the dummy cover first.
3. Insert the MSR / Fingerprint / iButton module in place and fasten the screws (x2) on the back to secure the module.

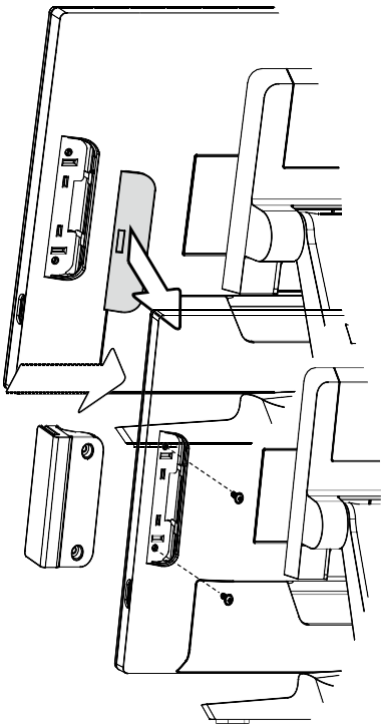

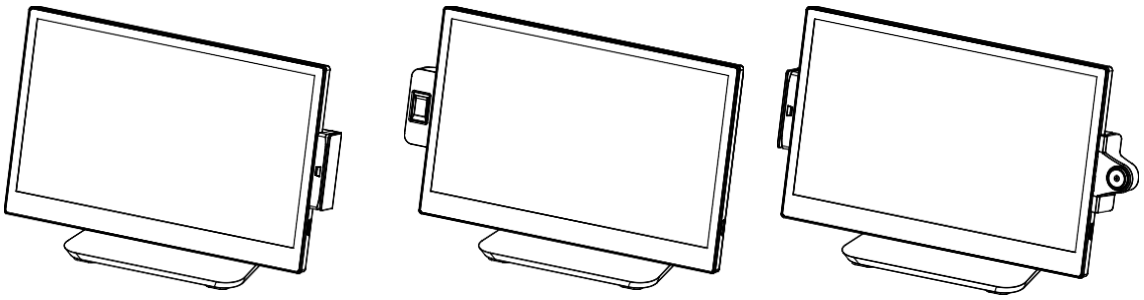

4-2. Install the Customer Display

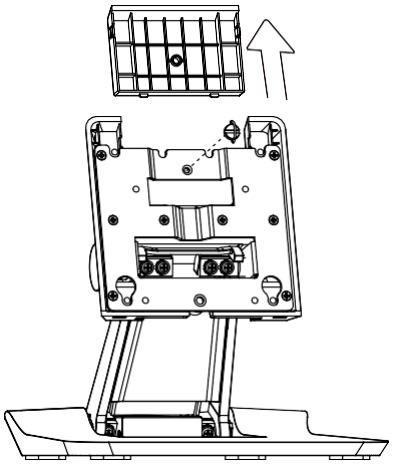

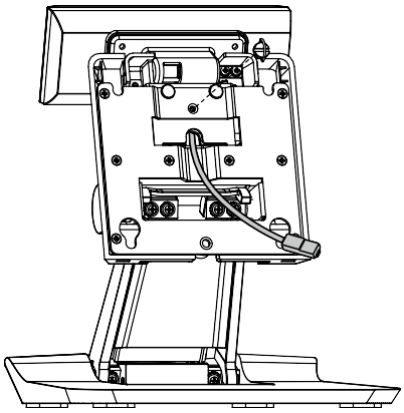

1. Follow the steps in Chapter 3-1 to diassemble the stand from the LCD panel.
2. Remove the thumb screw (x1) from the VESA top cover and then pull the cover up.
3. Attach the LCM module to system by fastening the thumb screw (x1).
4. Route the USB cable through the hole of the stand as picture shown.

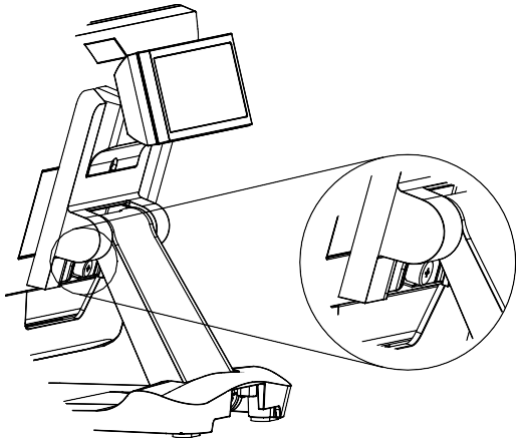

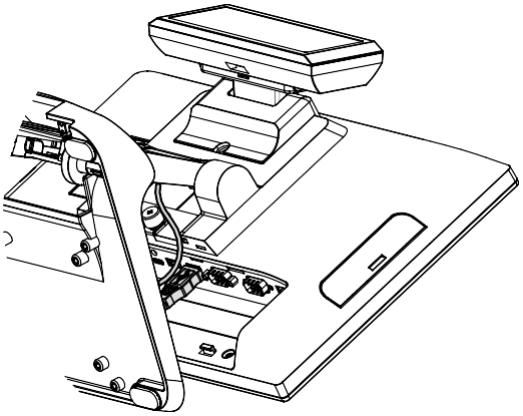

5. Attach the stand to the LCD panel and fasten the thumb screw (x1).
6. Connect the USB cable to the USB port on the systems IO panel. Make sure the system is powered off.

* Please note the cable cover and the stand front cover (refer to Chapter 3-2 and 3-3) have to be removed before routing the cable.

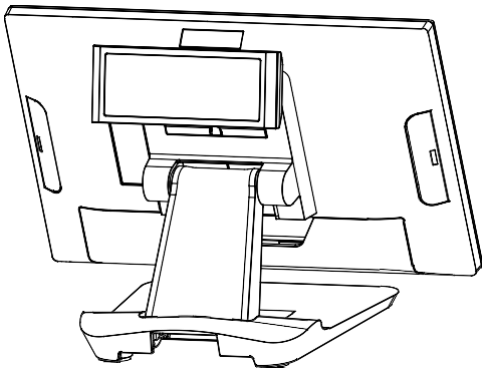

4-3. Install the Second Display

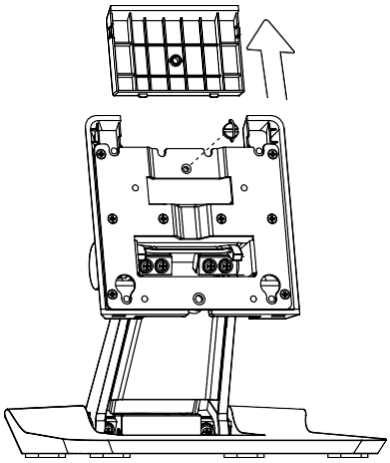

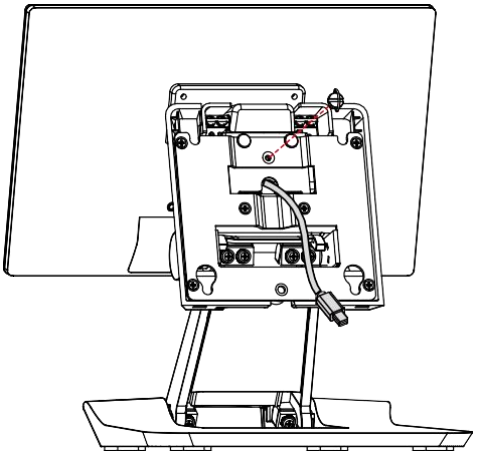

1. Follow the steps in Chapter 3-1 to diassemble the stand from the LCD panel.
2. Remove the thumb screw (x1) from the VESA top cover and then pull the cover up.
3. Attach the 11.6" 2nd display module to system by fastening the thumb screw (x1).
4. Route the mini display cable through the hole of the stand as picture shown.

5. Attach the stand to the LCD panel and fasten the thumb screw (x1).

6. Connect the mini display cable to FeDP port on the systems IO panel. Make sure the system is powered off.

* Please note the cable cover and the stand front cover (refer to Chapter 3-2 and 3-3) have to be removed before routing the cable.

4-4. Cash Drawer Installation

You can install a cash drawer through the cash drawer port. Please verify the pin assignment before installation.

Cash Drawer Pin Assignment

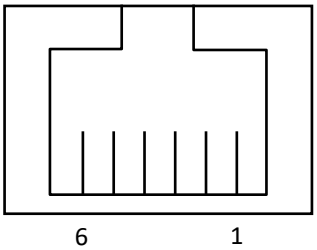

Pin	Signal
1	Cash drawer 2 In
2	Cash drawer 1 Out
3	Cash drawer 1 In
4	12V / 19V
5	Cash drawer 2 Out
6	GND

Cash Drawer Controller Register

The Cash Drawer Controller use one I/O addresses to control the Cash Drawer.

Register Location: 0x482h
Attribute: Read / Write
Size: 8bit

BIT	BIT7	BIT6	BIT5	BIT4	BIT3	BIT2	BIT1	BIT0
Attribute	Reserved			CD1 Out	CD1 In	Reserved		

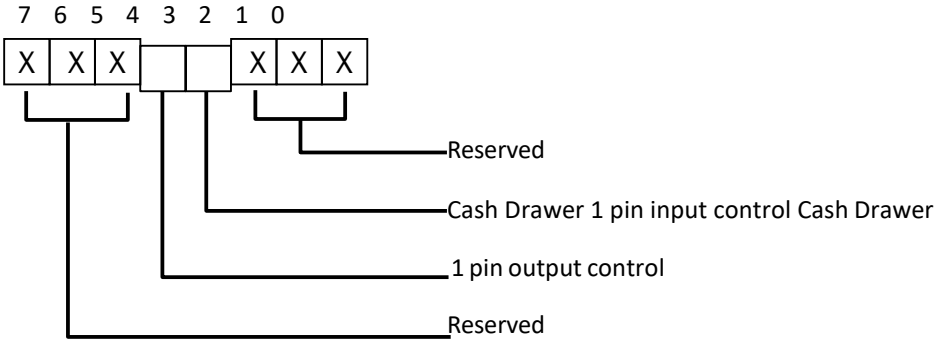

Bit 7: Reserved
Bit 6: Reserved
Bit 5: Reserved
Bit 4: Cash Drawer 1 pin output control.
= 1: Opening the Cash Drawer
= 0: Allow close the Cash Drawer
Bit 3: Cash Drawer 1 pin input control.
= 1: the Cash Drawer closed or no Cash Drawer
= 0: the Cash Drawer opened Bit 2:
Reserved
Bit 1: Reserved
Bit 0: Reserved

Note: Please follow the Cash Drawer control signal design to control the Cash Drawer.

Cash Drawer Control Command Example

Command	Cash Drawer
O 482 10	Opening
O 482 00	Allow to close
▶ Set the I/O address 482h bit4 =1 for opening Cash Drawer by "DOUT bit0" pin control. ▶ Set the I/O address 482h bit4 = 0 for allow close Cash Drawer.	

Command	Cash Drawer
I 482	Check status
▶ The I/O address 482h bit3 =1 mean the Cash Drawer is opened or not exist. ▶ The I/O address 482h bit3 =0 mean the Cash Drawer is closed.	

5. Specification

Model Name	Element 455W	
Mainboard	**F34**	**F64U**
CPU support	Intel Elkhart Lake CPU BGA-xxxx10nm Intel Elkhart Lake J6425 Celeron 1.8GHz, LLC 4M (10W)	Intel Whiskey LakeUCPU BGA-1528 (14nm) Celeron 4305UE 2GHz, LLC 2M (15W,EIA) Pentium 4205U (Base-U) 1.8GHz, LLC 2M(15W,IA) i3-8145UE 2.2GHz, LLC 4M (15W,EIA) i5-8265U 1.6GHz, LLC 6M (15W,IA) i5-8365UE 1.6GHz, LLC 6M (15W,EIA) i7-8665UE1.7GHz, LLC 8M (15W,EIA)
System memory	DDR4 S.O. DIMM x1, 2133 Mhz (32GB Max)	
Graphic memory	Intel Graphic (Gen 9) DX12, define on CPU	
LCD Touch Panel		
LCD size	15.6” LED (eDP)	
Brightness (cd/m²)	220 nits	
Maximal resolution	1920 x 1080	
Touch screen type	True flat (P-CAP)	
Tilt angle	0~90°	
Storage		
Flash Memory	M.2 SATA SSD or NVMe SSD	
Expansion		
m.2 (E-Key) Slot	1x (for WLAN)	
m.2 (m-Key) Slot	1x M-key 2280 (for storage)	2x M-key 2280 (for storage)
I/O Ports		
USB Type-A	4 (2x USB3.0, 2x USB 2.0)	
USB Type-C	1x USB2.0/USB3.0 data only (w/o MUX)+CC controler (5V only) 1x USB2.0 data only+CC controler (5V only) or PD source 5V/19V (PD option for POS)	1x USB2.0/USB3.0 data only, PDO 5V@3A /PDO 19V@5A 1x full functional, PDO 5V@3A /PDO 12V@1.5A / PDO 20V@1A
Serial / COM	2x DB9 (COM1 / COM2 w/5V/12V powered enabled by BIOS)	
LAN (10/100/1000)	1	
Cash drawer	1x RJ-11 (2 in 2 out)	
DC jack	1 (4-pin w/lock)	
Defined connector	1x mini-DP for 2nd display (2-lane eDP/USB2.0/audio(R-CH)/power button/power)	
Expansion I/O		
Powered USB	1x powered USB 12V, 1x powered USB 24V	
Power		
Power adapter	65W/19V	120W/19V
Peripherals (optional)		
MSR	1 (USB) (blade type)	
Fingerprint	1 (USB) (blade type)	

Model Name	Element 455W	
Mainboard	**F34**	**F64U**
iButton	1 (USB) (blade type)	
Second display	11.6” LED Second display (touch option)	
Customer display	Flush mount LCM display 2 x 20 characters (USB)	
Speaker	1 x 3W	
Control/Indicator		
Power button	1	
Power LED	1 (Blue) on the touch screen	
Certificate		
EMC & Safety	FCC, Class A, CE, LVD	
ESD	4 KV contact discharge, 8 KV air discharge	
Environment		
Sealing	IP54 (front side)	
Operating temperature	0°C ~ 35°C (32°F ~ 95°F)	
Storage temperature	-20°C ~ 60°C (-4°F ~ 140°F)	
Humidity	20% ~ 85% RH non-condensing	
Dimension (W x D x H)	369 x 201 x 262mm	
Weight	4.3kg	
OS supported	Windows 10 (64-bit), Windows IOT 10(64-bit) Linux: UbuntuAfter15.10, Fedora After 23, OpenSUSE42.1 no support (Kernel 4.1)	

*** This specification is subject to change without prior notice.**

6. Configuration

6.1 F34 Motherboard

6-1-1. Motherboard Layout

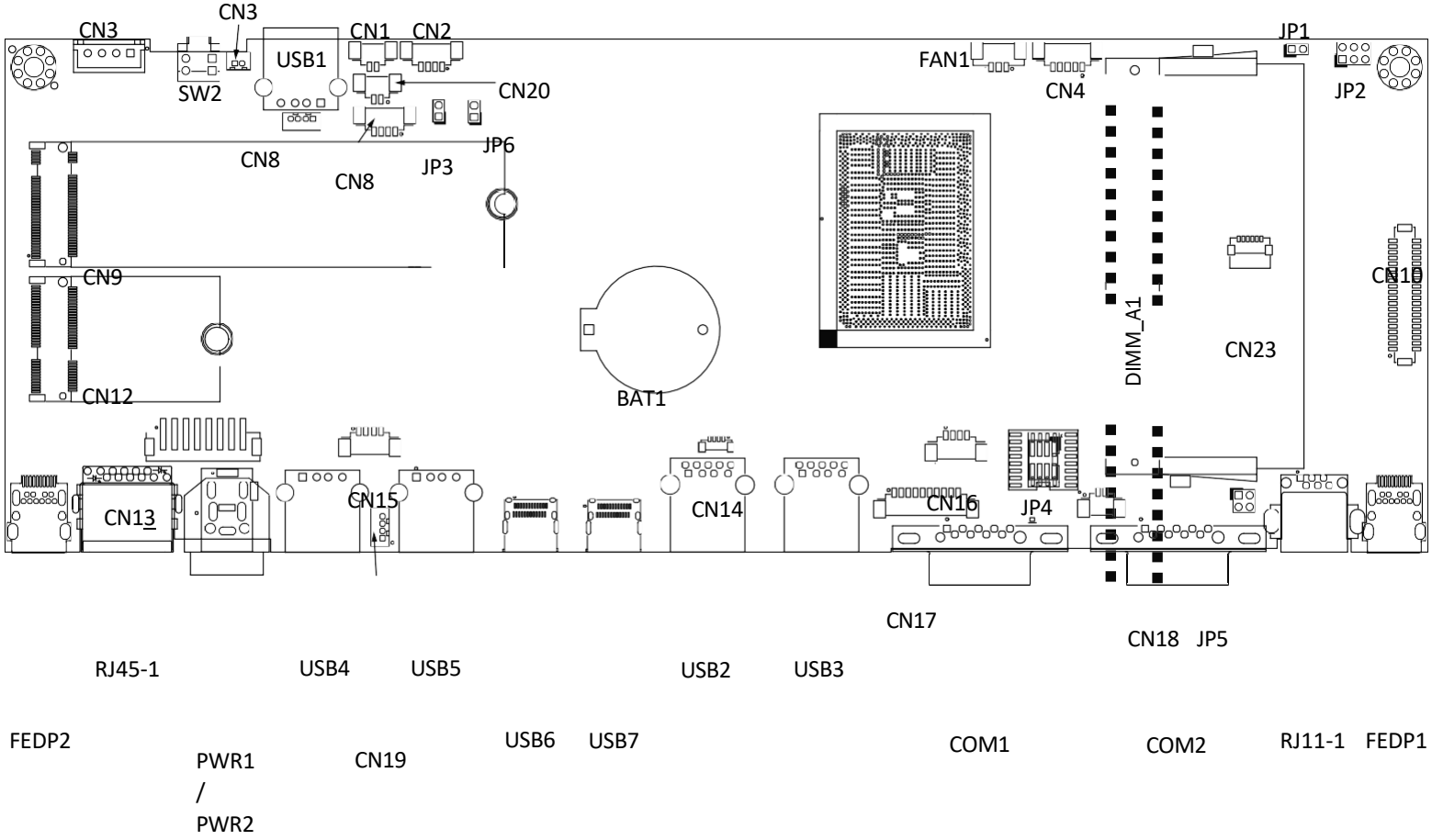

6-1-2. Connectors & Functions

Connector	Function
CN1	Speaker R output
CN2	S0/S5 LED & power button connector
CN3	SATA power connector
CN4	EC Debug
CN5	Speaker L output
CN7	Earphone connector
CN8/CN15/CN16/CN19	Internal USB connector
CN9	M.2 M-KEY PCIE/SATA connector
CN10	Internal eDP connector
CN12	M.2 E-KEY WIFI connector
CN13	Wide range & Power connector
CN18	Storage LED connector
CN20	Mic-out connector
PWR1/PWR2	DC jack (2pin/4pin)
RJ11_1	Cash drawer connector
RJ45_1	LAN connector
SW1/SW2	Power button
DIMM_A1	DDR4 SO-DIMM
FAN1	CPU FAN connector
FeDP1	FeDP main display connector
FeDP2	FeDP 2nd display connector
USB1/USB4/USB5	USB2.0 connector
USB2/USB3	USB3.0 connector
USB6	USB-C data only connector (USB3.0/2.0)
USB7	USB-C data only connector (USB2.0)
COM1/COM2	COM port connector
COM3 (CN17)	Internal COM port connector
BAT1	RTC Battery
JP2	Speaker cable watt setting
JP3	Audio Line-out setting
JP5	Cash drawer power setting

6-1-3. Jumper Setting

Speaker Cable Watt Setting

Function	JP2
▲ L=0.58m	1 3 2 4
L=2.0m	1 3 2 4
M/B	1 3 2 4

Audio Line-out Setting

Function	JP3
▲Stereo	1 2
Reserved (line-out)	1 2

Cash Drawer Power Setting

Function	JP5
▲ +19V	1 3 2 4
+12V	1 3 2 4

▲ = Manufacturer Default Setting

1
2 Jumper open

1
2 Jumper short

LCD ID Setting

To set the panel ID, please insert the jumper on the FeDP to LVDS board.

Panel#	Resolution	JP3
0	Reserved	2 4 6 8 10
1	800 x 600	1 3 5 7 9 2 4 6 8 10
2	800 x 600	1 3 5 7 9 4 6 8 10
3	1024 x 768	1 3 5 7 9 2 4 6 8 10
4	1024 x 768	1 3 5 7 9 2 4 6 8 10
5	1366 x 768	5 7 9 2 4 6 8 10
6	1366 x 768	1 5 7 9 2 4 6 8 10
7	1024 x 600	1 3 5 7 9 2 4 6 8 10
8	1280 x 1024	1 3 5 7 9 2 4 6 8 10
9 (1 2 Jumper open)	1440 x 900	7 8 10
15	1920 x 1080	1 7 2 8 10

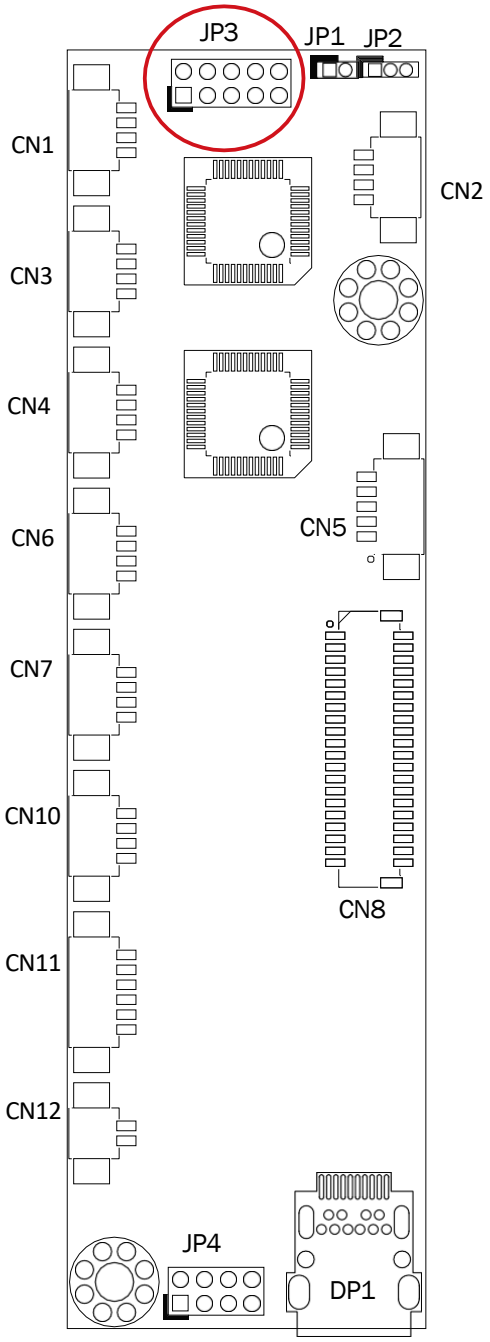

1 2 Jumper short

Panel Backlight Current Setting

LED current	JP4
200mA	1 5 7 2 6 8
240mA	1 3 7 2 4 8
280mA	1 3 5 2 4 6
320mA	5 7 6 8
360mA	3 7 4 8
400mA	3 5 4 6
420mA	1 7 2 8
460mA	1 3 5 7 2 4 6 8
500mA	1 3 5 7 2 4 6 8

1
2 Jumper open

1
2 Jumper short

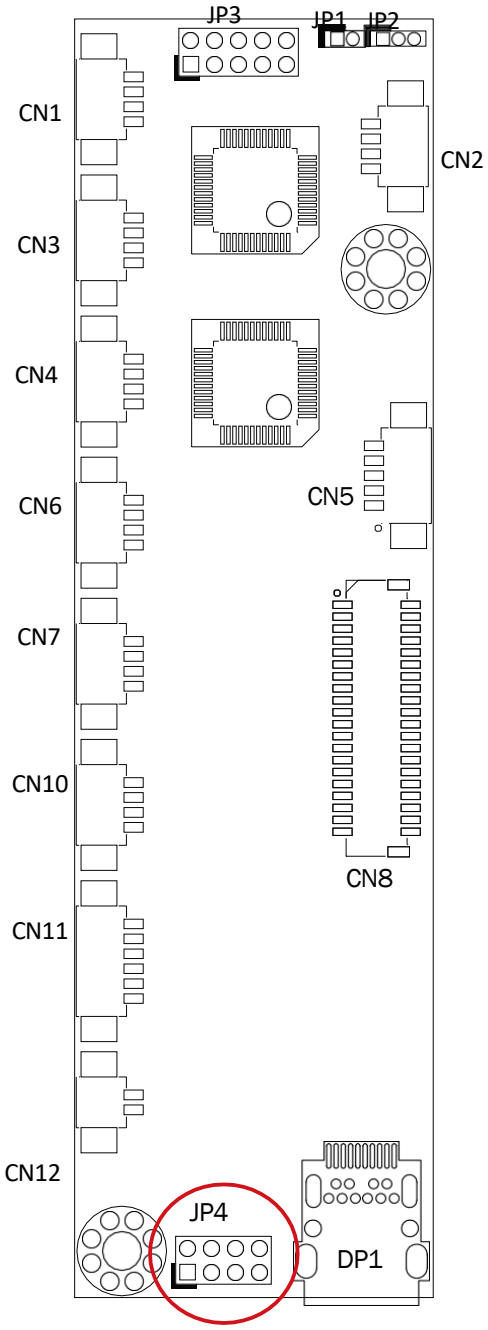

COM1/COM2 Power Setting

COM1, COM2 can be set to provide power to your serial device. The voltage can be set to +5V or +12V in the BIOS.

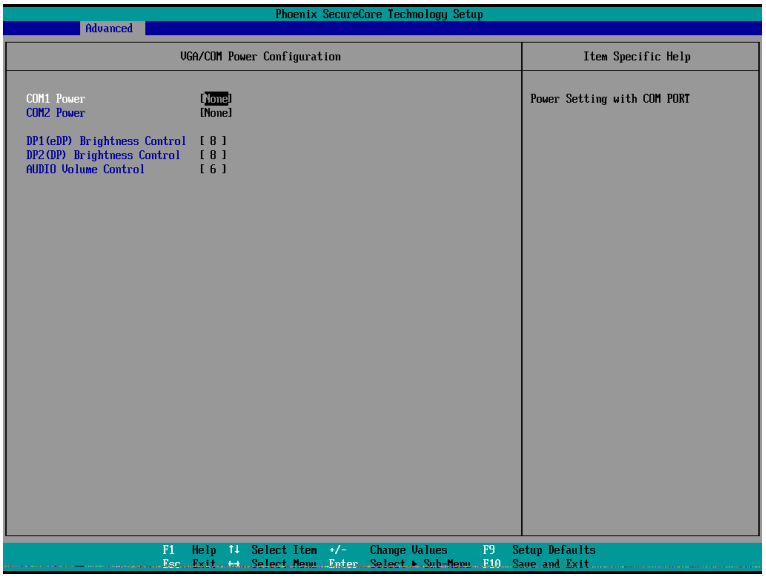

1. Power on the system, and press the <DEL> key when the system is booting up to enter the BIOS Setup utility.
2. Select the Advanced tab.
3. Select **VGA/COM Power Configuration** Ports and press <Enter> to go to display the available options.
4. To enable the power, select COM1 ,COM2 Power setting and press <Enter>. Select Power and press <Enter>. Save the change by pressing F10.

6.2 F64U Motherboard

6-2-1. Motherboard Layout

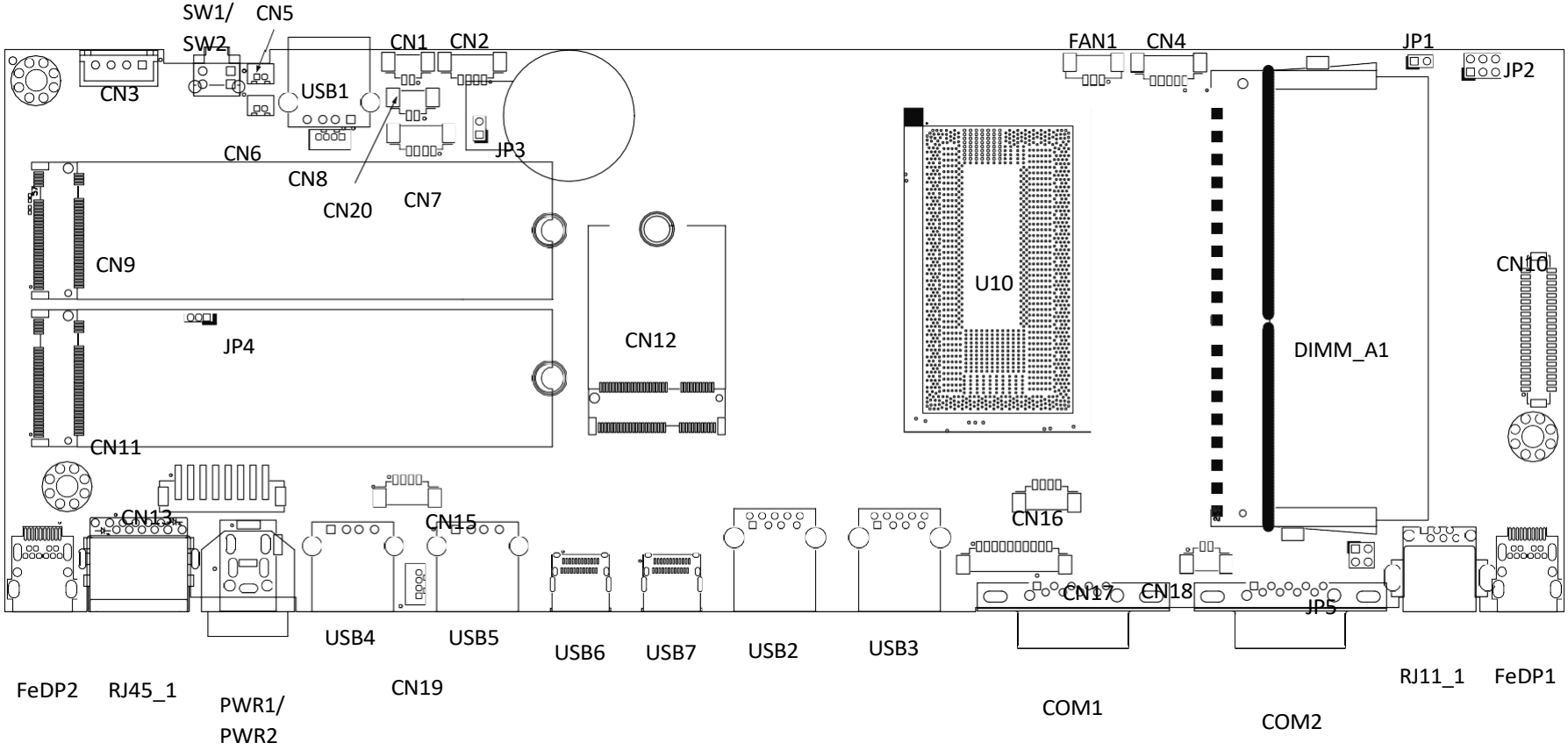

6-2-2. Connectors & Functions

Connector	Function
CN1	Speaker R output
CN2	S0/S5 LED & power button connector
CN3	SATA power connector
CN4	EC Debug
CN5	Speaker L output
CN6	RTC battery connector
CN7	Earphone conector
CN8/CN15/CN16/CN19	Internal USB connector
CN9/CN11	M.2 M-KEY PCIE/ SATA connector
CN10	Internal eDP connector
CN12	M.2 E-KEY WIFI connector
CN13	Wide range & power connector
CN18	Storage LED connector
CN20	Mic-out connector
PWR1/PWR2	DC jack (2pin/4pin)
RJ11_1	Cash drawer connector
RJ45_1	LAN connector
SW1/SW2	Power button
DIMM_A1	DDR4 SO-DIMM
FAN1	CPU FAN connector
FeDP1	FeDP main display connector
FeDP2	FeDP 2nd display connector
USB1/USB4/USB5	USB2.0 connector
USB2/USB3	USB3.0 connector
USB6	USB-C full function connector
USB7	USB-C data only connector
COM1/COM2	COM port connector
COM3 (CN17)	Internal COM port connector
JP2	Speaker cable watt setting
JP3	Audio Line-out setting
JP5	Cash drawer power setting

6-2-3. Jumper Setting

Speaker Cable Setting

Function	JP2
▲ L=0.46m~2m (2W)	1 3 2 4
M/B (2W)	1 3 2 4
L=0.46m~2m (3W)	1 3 2 4
M/B (3W)	1 3 2 4

Audio Line-out Setting

Function	JP3
▲Stereo	1 2
Reserved (line-out)	1 2

Cash Drawer Power Setting

Function	JP5
▲ +19V	1 3 2 4
+12V	1 3 2 4

▲ = Manufacturer Default Setting

1
2 Jumper open

1
2 Jumper short

LCD ID Setting

To set the panel ID, please insert the jumper on the FeDP to LVDS board.

Panel#	Resolution	JP3
0	Reserved	2 4 6 8 10
1	800 x 600	1 3 5 7 9 2 4 6 8 10
2	800 x 600	1 3 5 7 9 4 6 8 10
3	1024 x 768	1 3 5 7 9 2 4 6 8 10
4	1024 x 768	1 3 5 7 9 2 4 6 8 10
5	1366 x 768	5 7 9 2 4 6 8 10
6	1366 x 768	1 5 7 9 2 4 6 8 10
7	1024 x 600	1 3 5 7 9 2 4 6 8 10
8	1280 x 1024	1 3 5 7 9 2 4 6 8 10
1 9 2 Jumper open	1440 x 900	7 8 10
15	1920 x 1080	1 7 2 8 10

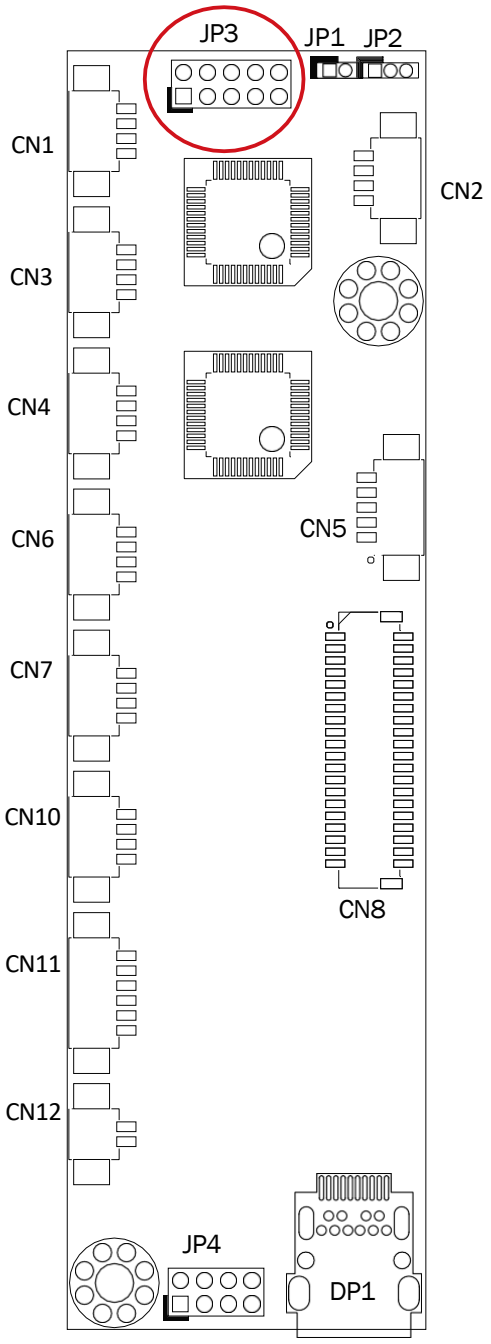

1
2 Jumper short

Panel Backlight Current Setting

LED current	JP4
200mA	1 5 7 2 6 8
240mA	1 3 7 2 4 8
280mA	1 3 5 2 4 6
320mA	5 7 6 8
360mA	3 7 4 8
400mA	3 5 4 6
420mA	1 7 2 8
460mA	1 3 5 7 2 4 6 8
500mA	1 3 5 7 2 4 6 8

1
2 Jumper open

1
2 Jumper short

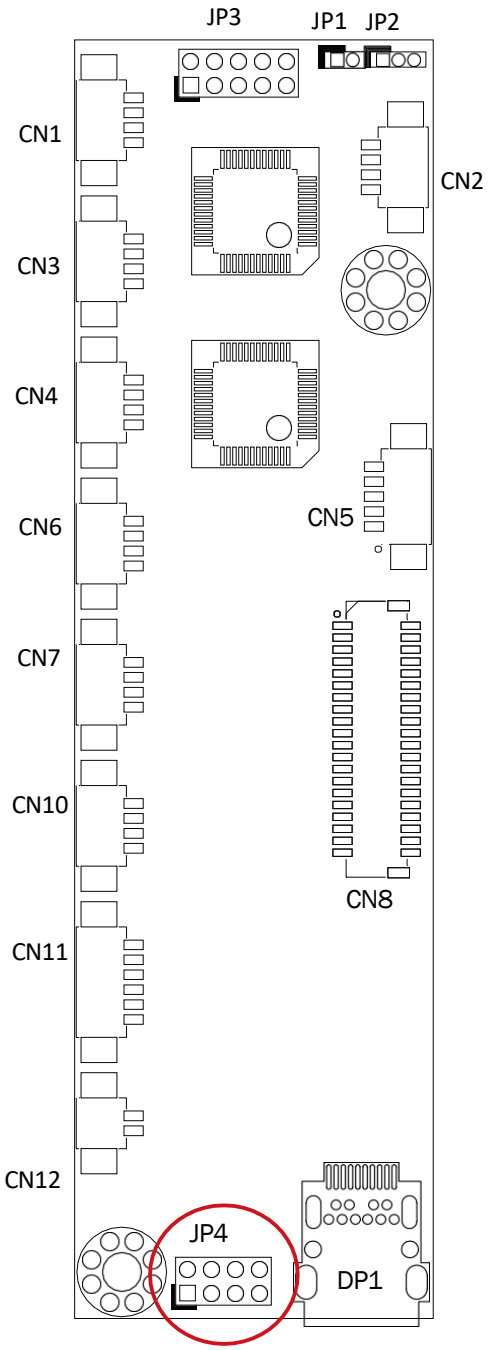

COM1/COM2 Power Setting

COM1, COM2 can be set to provide power to your serial device. The voltage can be set to +5V or +12V in the BIOS.

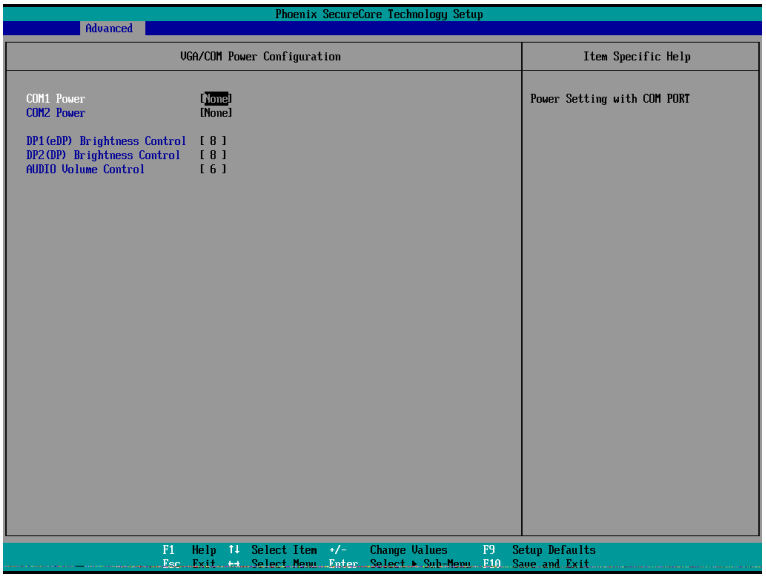

1. Power on the system, and press the <DEL> key when the system is booting up to enter the BIOS Setup utility.
2. Select the Advanced tab.
3. Select **VGA/COM Power Configuration** Ports and press <Enter> to go to display the available options.
4. To enable the power, select COM1 ,COM2 Power setting and press <Enter>. Select Power and press <Enter>. Save the change by pressing F10.